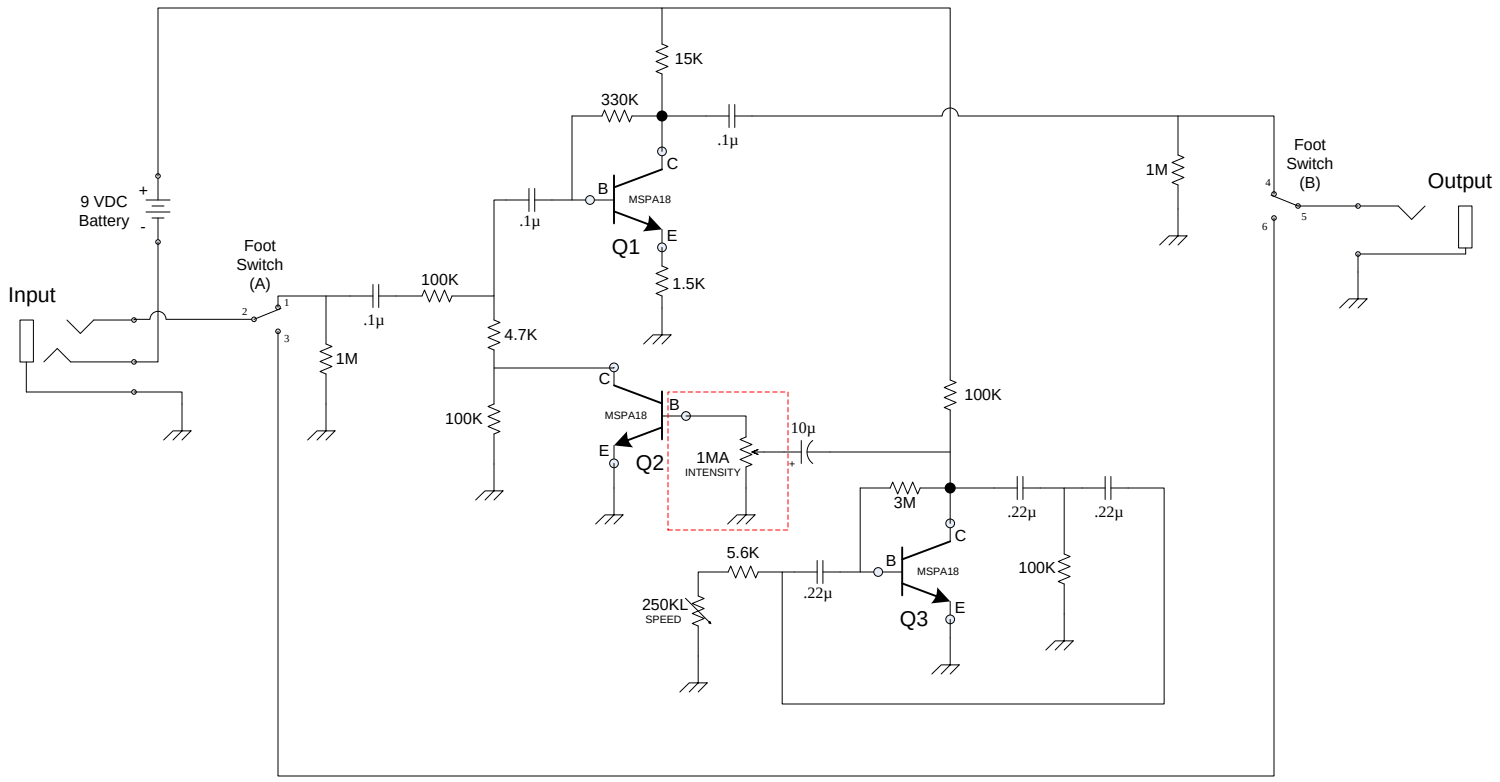

DPDT Foot Switch

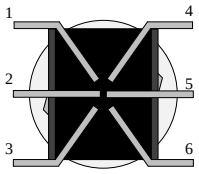

MPSA18
NPN BJT

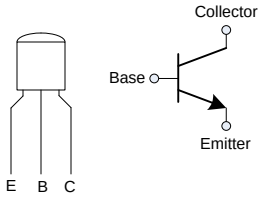

www.modkitsdiy.com

Copyright © 2013 by modkitsdiy.com

"The Trill" (K-960) Intensity Modification Schematic

1MA Intensity Control Modification
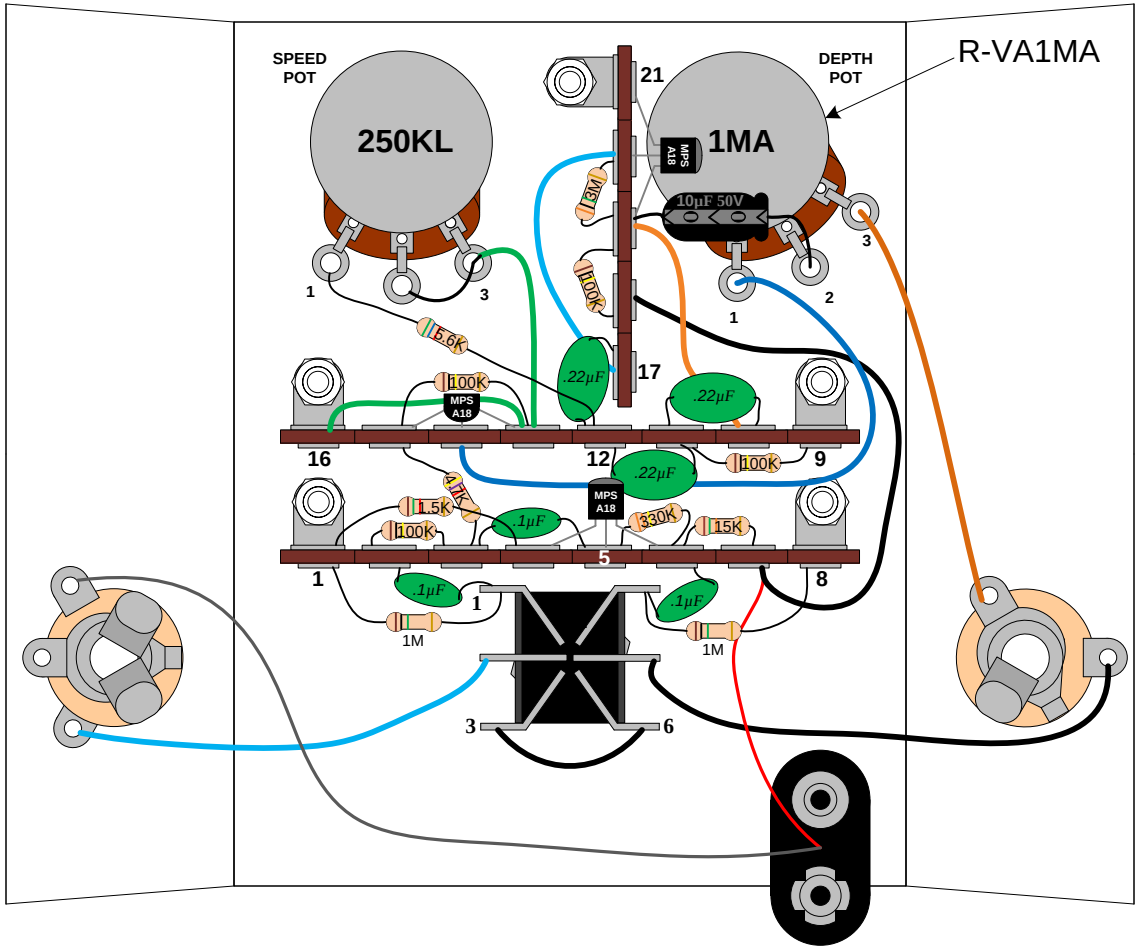
- Change the “depth” pot to a 1MA.
- Connect 10 µF cap (+) lead to 1MA pot lug 2.
- Connect MPSA18 (Q2) base to 1MA pot lug 1.
- Connect 1MA pot lug 3 to ground.